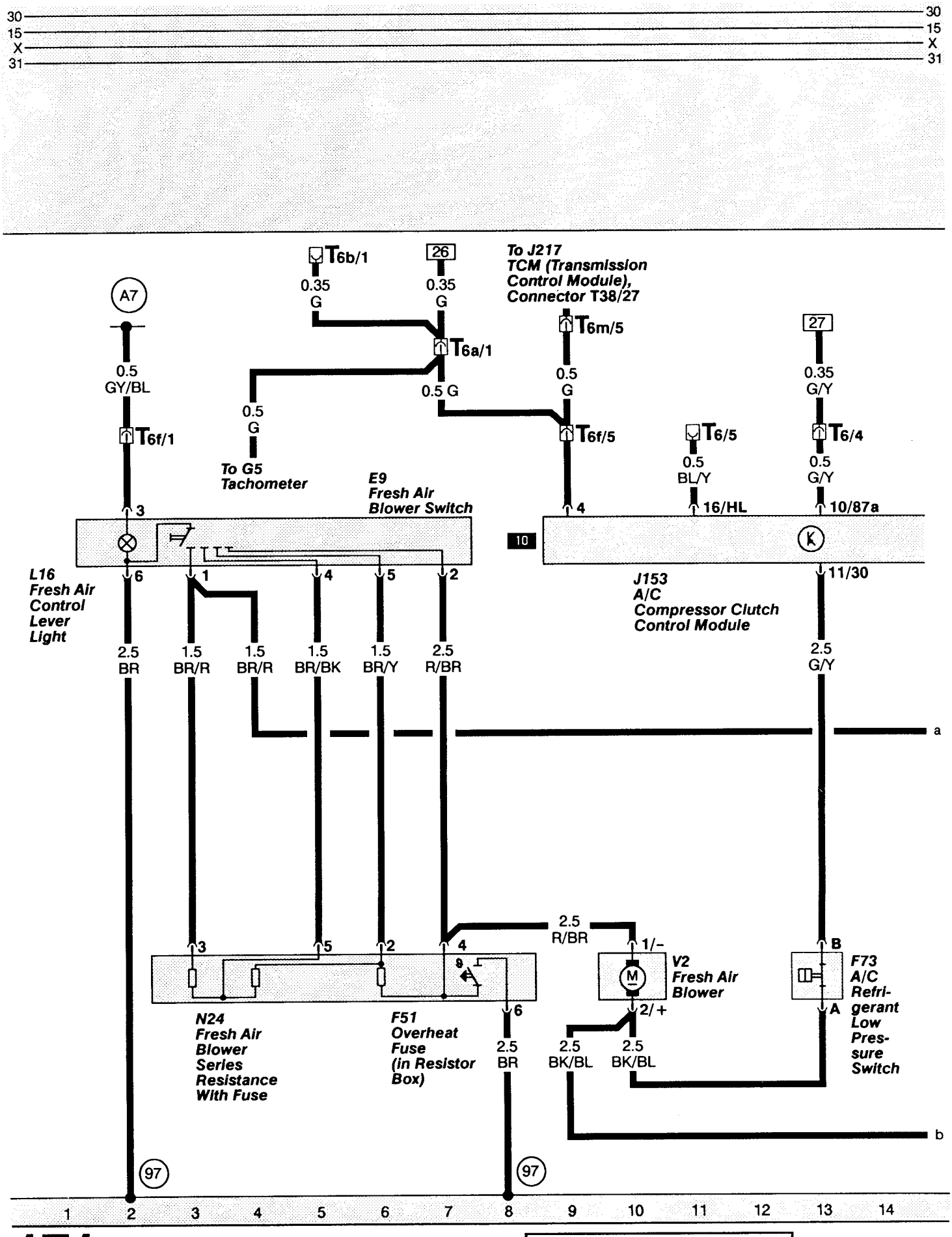
30
15
X
31
T6b/1
26
0.35
G
0.35
G
To J217
TCM (Transmission
Control Module),
Connector T38/27
A7
T6m/5
27
T6a/1
0.5
GY/BL
0.5
G
0.5 G
0.5
G
0.35
G/Y
T6f/1
T6f/5
T6/5
T6/4
To G5
Tachometer
E9
Fresh Air
Blower Switch
0.5
BL/Y
0.5
G/Y
3
4
16/HL
10/87a
10
L16
Fresh Air
Control
Lever
Light
6
1
4
5
2
J153
A/C
Compressor Clutch
Control Module
11/30
2.5
BR
1.5
BR/R
1.5
BR/R
1.5
BR/BK
1.5
BR/Y
2.5
R/BR
2.5
G/Y
a
2.5
R/BR
3
5
2
4
1/-
B
V2
Fresh Air
Blower
F73
A/C
Refri-
gerant
Low
Pres-
sure
Switch
2/+
A
N24
Fresh Air
Blower
Series
Resistance
With Fuse
F51
Overheat
Fuse
(in Resistor
Box)
6
2.5
BR
2.5
BK/BL
2.5
BK/BL
b
97
97
1
2
3
4
5
6
7
8
9
10
11
12
13
14

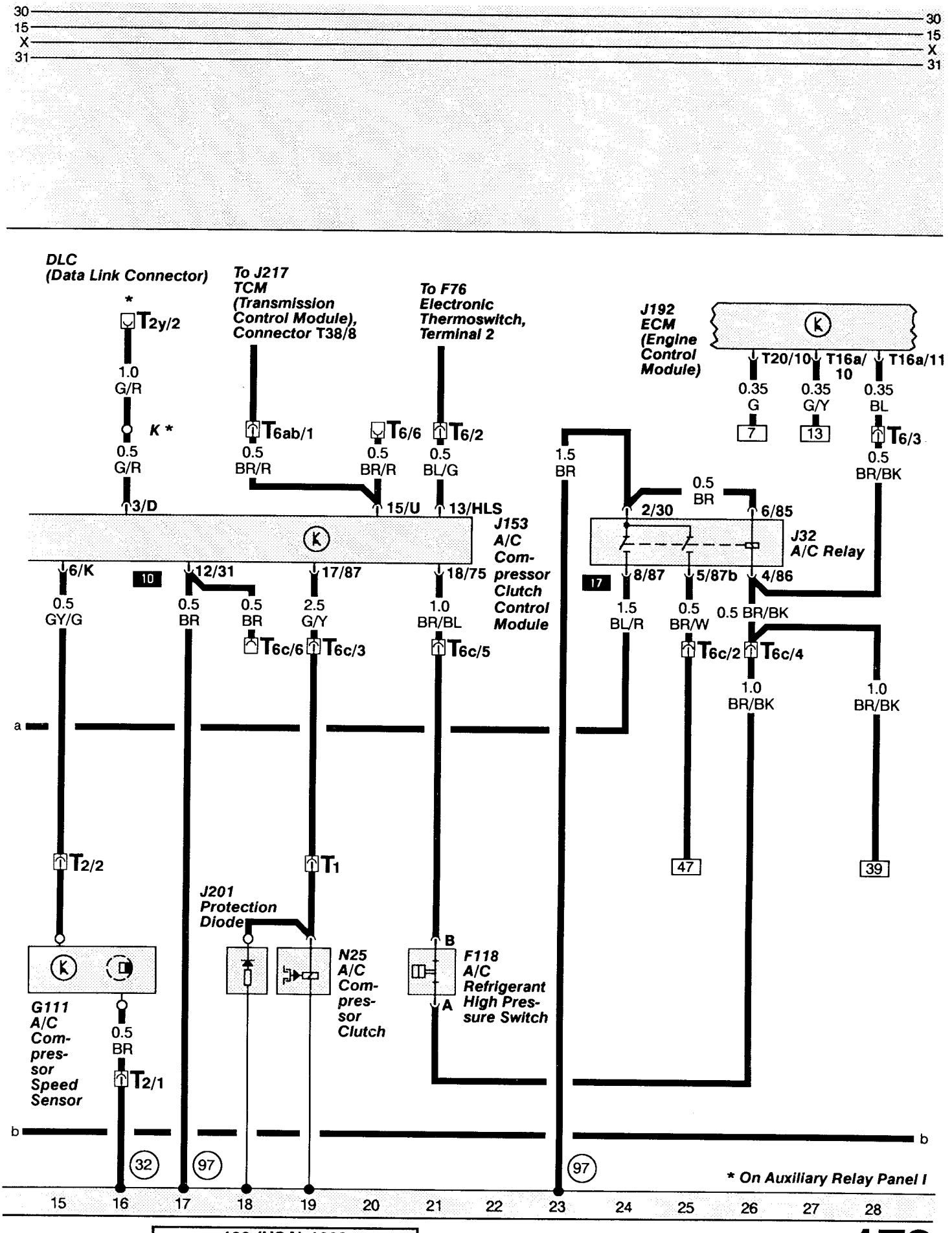
30
15
X
31
DLC
(Data Link Connector)
*
T2y/2
1.0
G/R
K *
0.5
G/R
3/D
To J217
TCM
(Transmission
Control Module),
Connector T38/8
T6ab/1
0.5
BR/R
T6/6
0.5
BR/R
To F76
Electronic
Thermoswitch,
Terminal 2
T6/2
0.5
BL/G
15/U
13/HLS
J153
A/C
Compressor
Clutch
Control
Module
6/K
10
12/31
17/87
18/75
0.5
GY/G
0.5
BR
0.5
BR
2.5
G/Y
1.0
BR/BL
T6c/6
T6c/3
T6c/5
J192
ECM
(Engine
Control
Module)
T20/10
T16a/
10
T16a/11
0.35
G
0.35
G/Y
0.35
BL
7
13
T6/3
0.5
BR/BK
1.5
BR
0.5
BR
2/30
6/85
J32
A/C Relay
17
8/87
5/87b
4/86
1.5
BL/R
0.5
BR/W
0.5 BR/BK
T6c/2
T6c/4
1.0
BR/BK
1.0
BR/BK
47
39
a
T2/2
T1
J201
Protection
Diode
N25
A/C
Compressor
Clutch
B
A
F118
A/C
Refrigerant
High Pressure Switch
G111
A/C
Compressor
Speed
Sensor
0.5
BR
T2/1
b
32
97
97
* On Auxiliary Relay Panel I
15
16
17
18
19
20
21
22
23
24
25
26
27
28

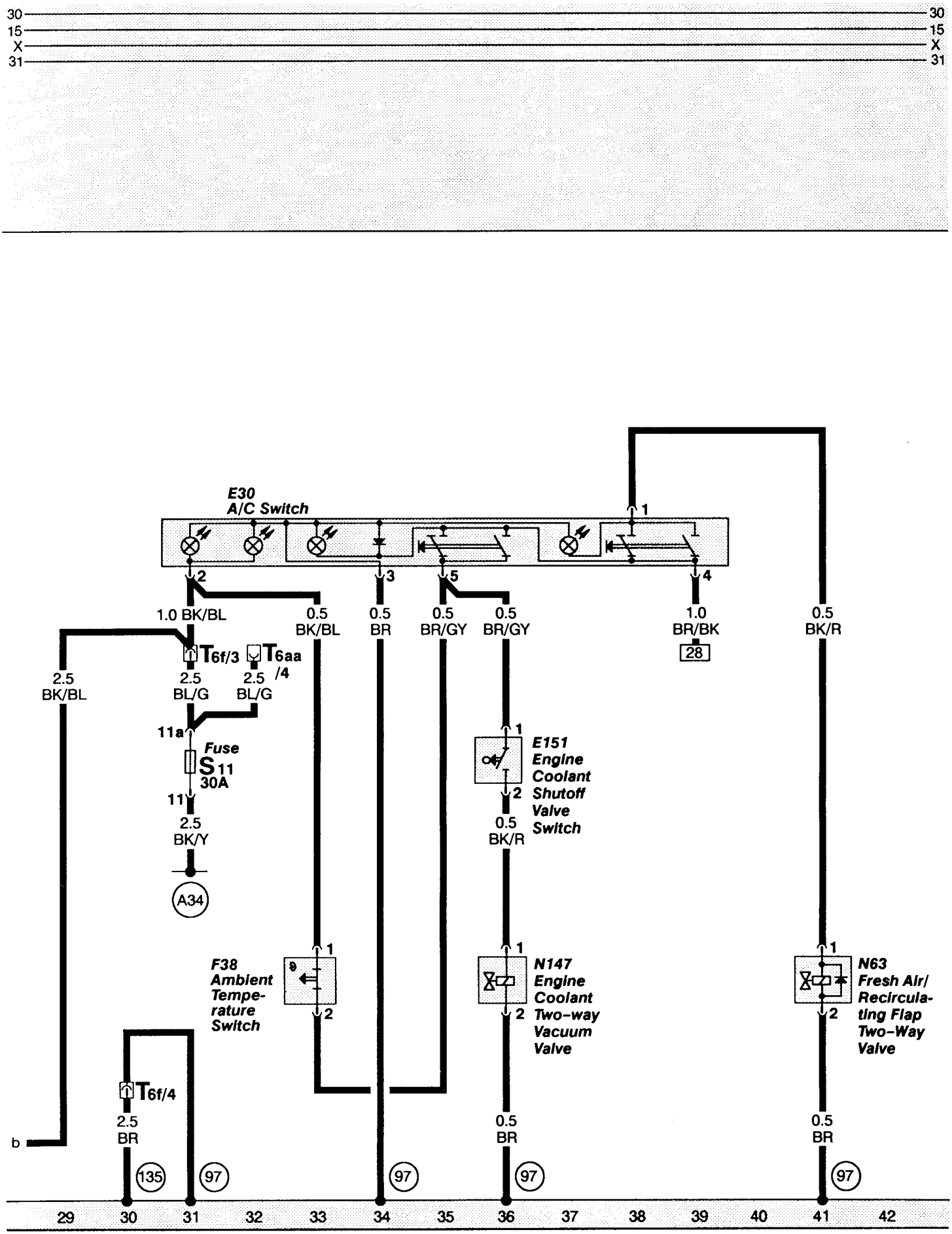
30
15
X
31
E30
A/C Switch
1.0 BK/BL
0.5 BK/BL
0.5 BR
0.5 BR/GY
0.5 BR/GY
1.0 BR/BK
28
0.5 BK/R
T6f/3
T6aa /4
2.5 BK/BL
2.5 BL/G
2.5 BL/G
11a
Fuse
S11
30A
11
2.5 BK/Y
A34
E151
Engine Coolant Shutoff Valve Switch
0.5 BK/R
F38
Ambient Temperature Switch
N147
Engine Coolant Two-way Vacuum Valve
N63
Fresh Air/ Recirculating Flap Two-Way Valve
T6f/4
2.5 BR
0.5 BR
0.5 BR
b
135
97
97
97
97
29
30
31
32
33
34
35
36
37
38
39
40
41
42

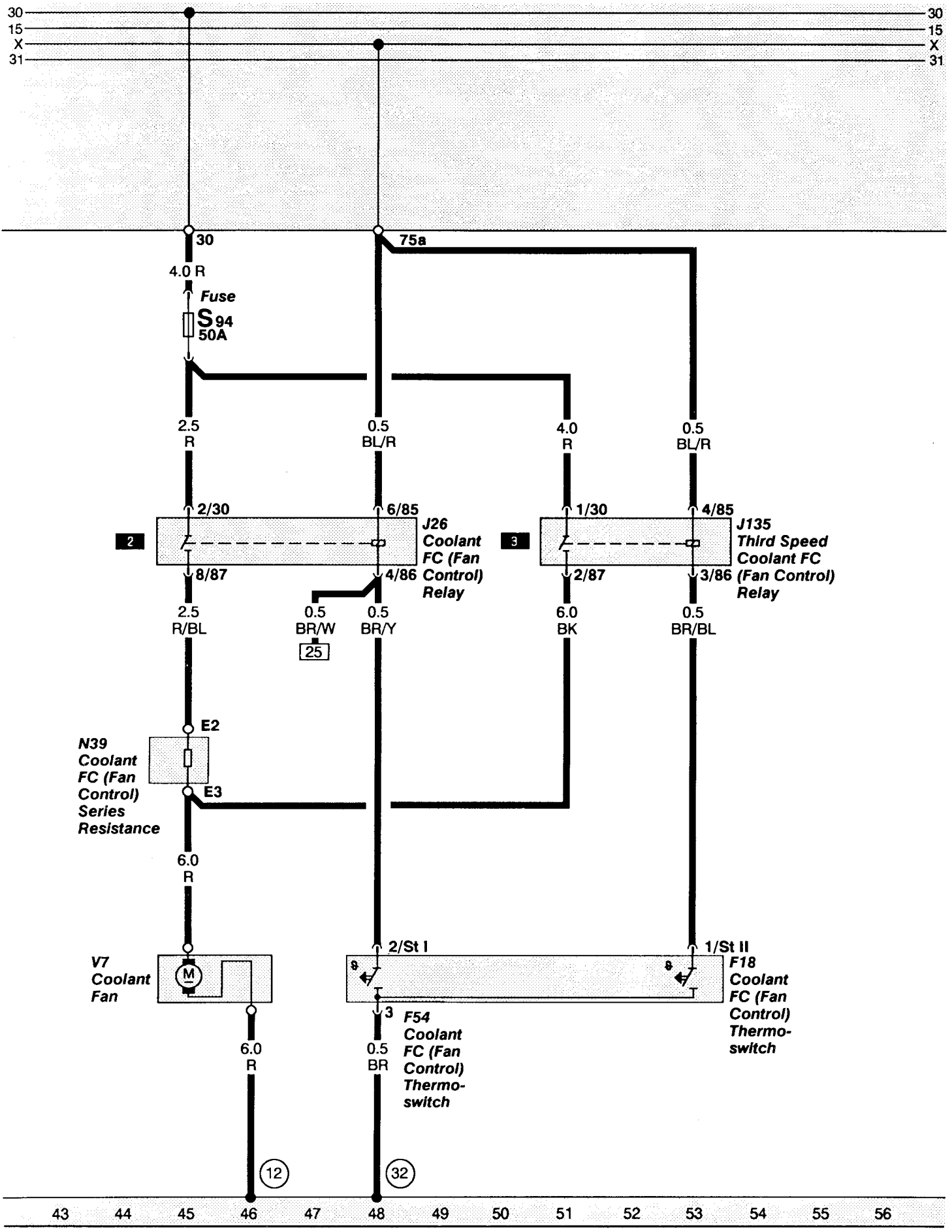
30
15
X
31
30
75a
4.0 R
Fuse
S 94
50A
2.5
R
0.5
BL/R
4.0
R
0.5
BL/R
2/30
6/85
J26
Coolant
FC (Fan
Control)
Relay
8/87
4/86
1/30
4/85
J135
Third Speed
Coolant FC
(Fan Control)
Relay
2/87
3/86
2.5
R/BL
0.5
BR/W
25
0.5
BR/Y
6.0
BK
0.5
BR/BL
E2
N39
Coolant
FC (Fan
Control)
Series
Resistance
E3
6.0
R
V7
Coolant
Fan
M
2/St I
1/St II
F18
Coolant
FC (Fan
Control)
Thermo-
switch
3
F54
Coolant
FC (Fan
Control)
Thermo-
switch
6.0
R
0.5
BR
12
32
43
44
45
46
47
48
49
50
51
52
53
54
55
56