SYSTEM WIRING DIAGRAMS
Anti-theft Circuit (1 of 2)

1994 Audi 90
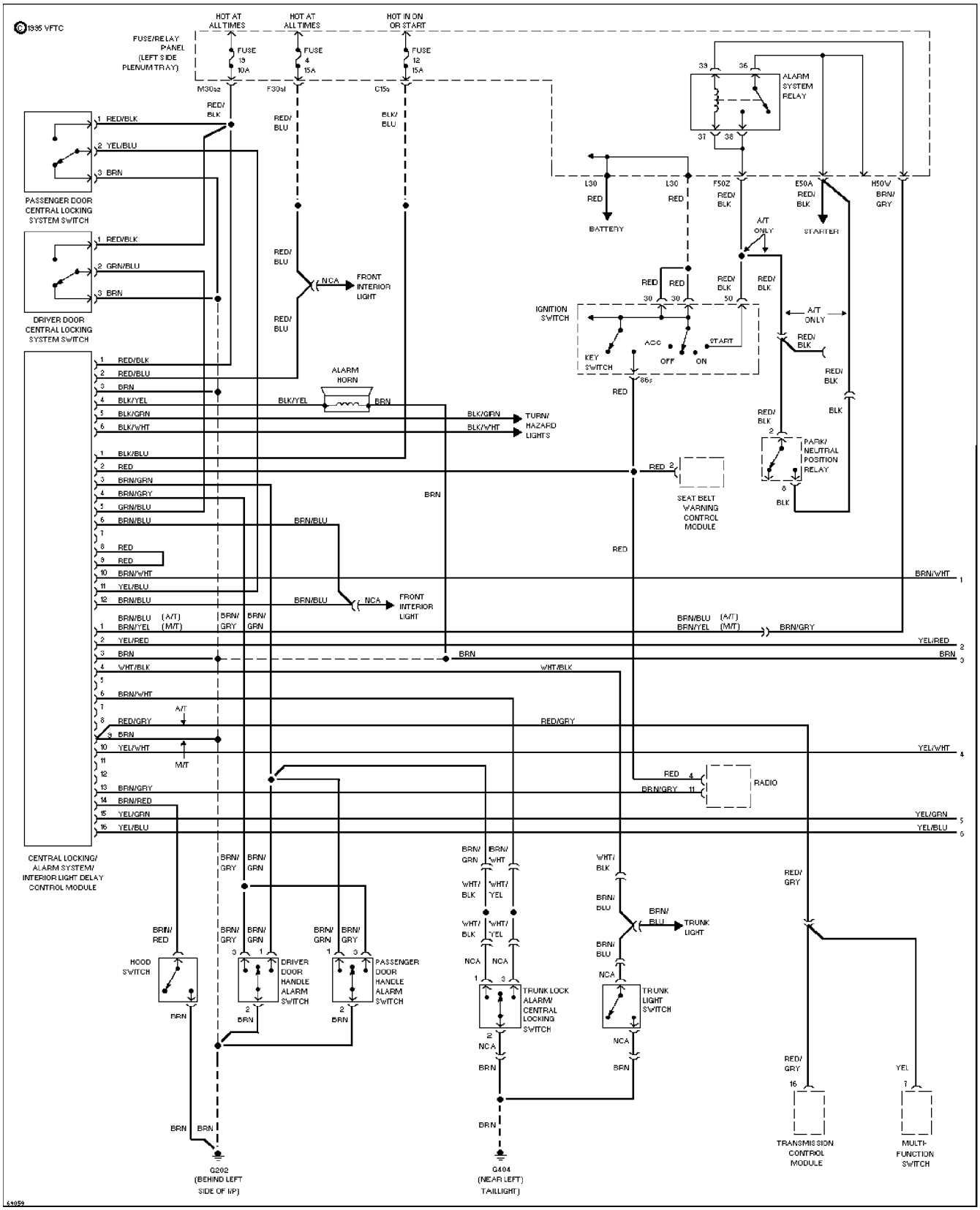
For DIAKOM-AUTO http://www.diakom.ru Taganrog support@diakom.ru (8634)315187
Copyright © 1998 Mitchell Repair Information Company, LLC
Wednesday, November 01, 2000 11:44AM